# VKP 125/125*2

Centrifugal inline fans with backward curved blades

• Impeller type: Centrifugal impeller with backward curved blades
• Casing material: Coated steel
• Installation in any position
• Sound pressure level LpA at 10 ft: 4.5



| | Unit of measurement | VKP 125/125*2 | |
|---|---|---|---|
| Connected air duct size | in | 5” | 5” |
| Minimum supply voltage | V | 120 | |
| Maximum supply voltage | V | 120 | |
| Power supply frequency | Hz | 60 | |
| Rated power | W | 74 | |
| Maximum unit current | A | 0.61 | |
| Ingress protection rating | - | IPX4 | |
| Impeller material | - | Plastic | |
| Sound pressure level LpA at 10 ft | Sones | 4.5 | |

## Dimensions

| ØD | ØD1 | A | L | B | H |
|---|---|---|---|---|---|
| 5” | 5” | 19 19/64” | 16 3/16” | 12 3/16” | 7 1/2” |

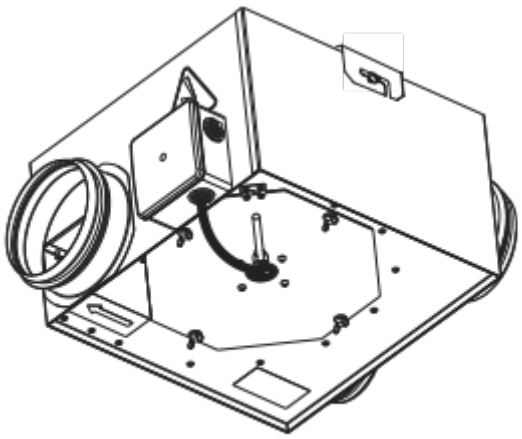

Twin intake fan

